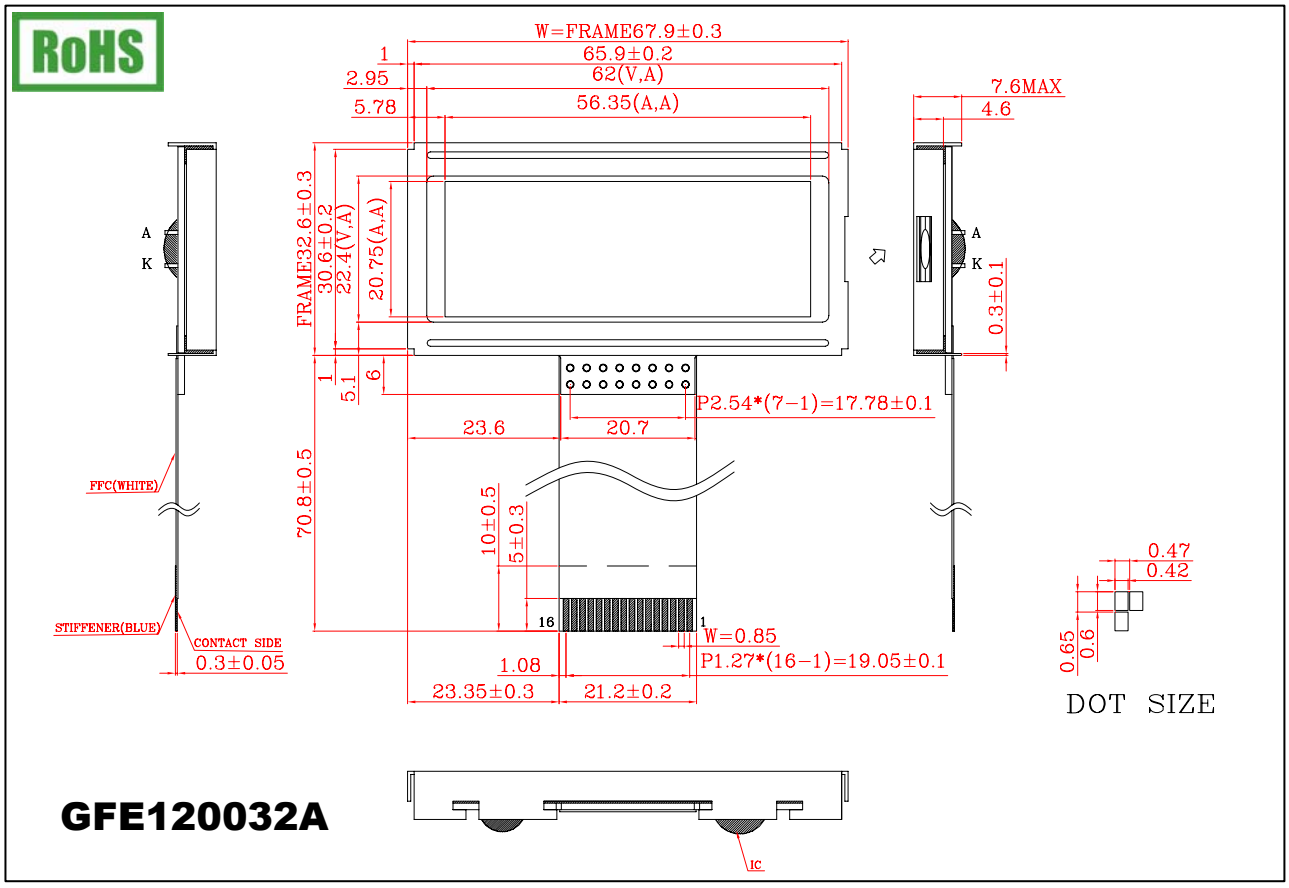

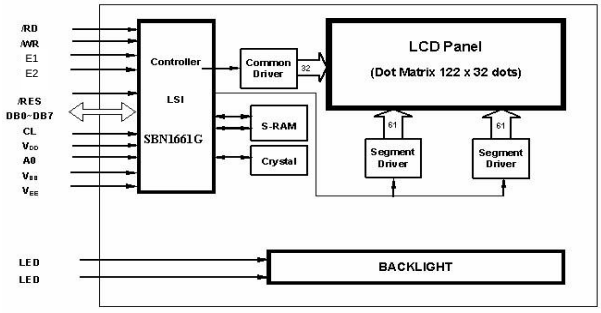

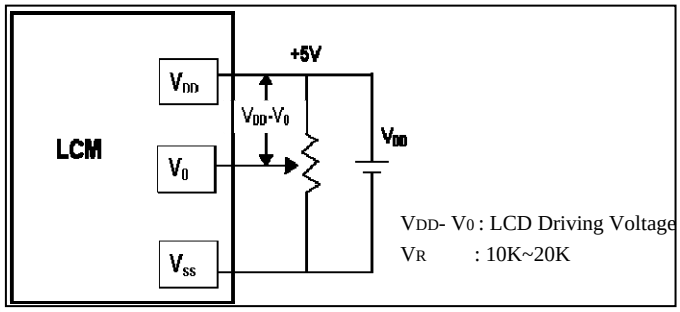

Interface		
Pin no	Symbol	Function
1	VSS	Power supply (GND)
2	VCC	Power supply(+)
3	VO	Contrast Adjudtment
4	A0	Selection of command or data.
5	R/W	Read/Write (R/W) signal
6	E1	Enable chip1
7	E2	Enable chip2
8	LEDK	LED B/L (-)
9	DB0	Date bus line
10	DB1	Date bus line
11	DB2	Date bus line
12	DB3	Date bus line
13	DB4	Date bus line
14	DB5	Date bus line
15	DB6	Date bus line
16	DB7	Date bus line

Feature			
Controller	SBN1661G	Module	67.9 x 32.6
Duty	1/32 duty	Viewing Area	62.0 x 22.4
Bias	1/5 bias	Mounting hole	-
B/L	Y/G	Character Size	0.42 x 0.6

Absolute Maximum Rating					
I tem	Symbol	Condition	Min	Max	Units
Supply for logic voltage	Vdd-Vss	25˚c	-0.3	7	V
LCD driving supply voltage	Vdd-Vss	25˚c	-0.3	13	V
Input voltage	Vin	25˚c	-0.3	Vdd+0.3	V

Electrical Characteristics						
Item	Symbol	Condition	Min.	Typ.	Max.	Units
Power supply voltage	Vdd-Vss	25˚c	2.7	-	5.5	V
LCD operation voltage	Vop	25˚c	-	5.4	-	V
LED Forward Voltage	VF	25˚c	-	4.2	-	V
LED Forward Current	IF	25˚c	-	100	-	mA